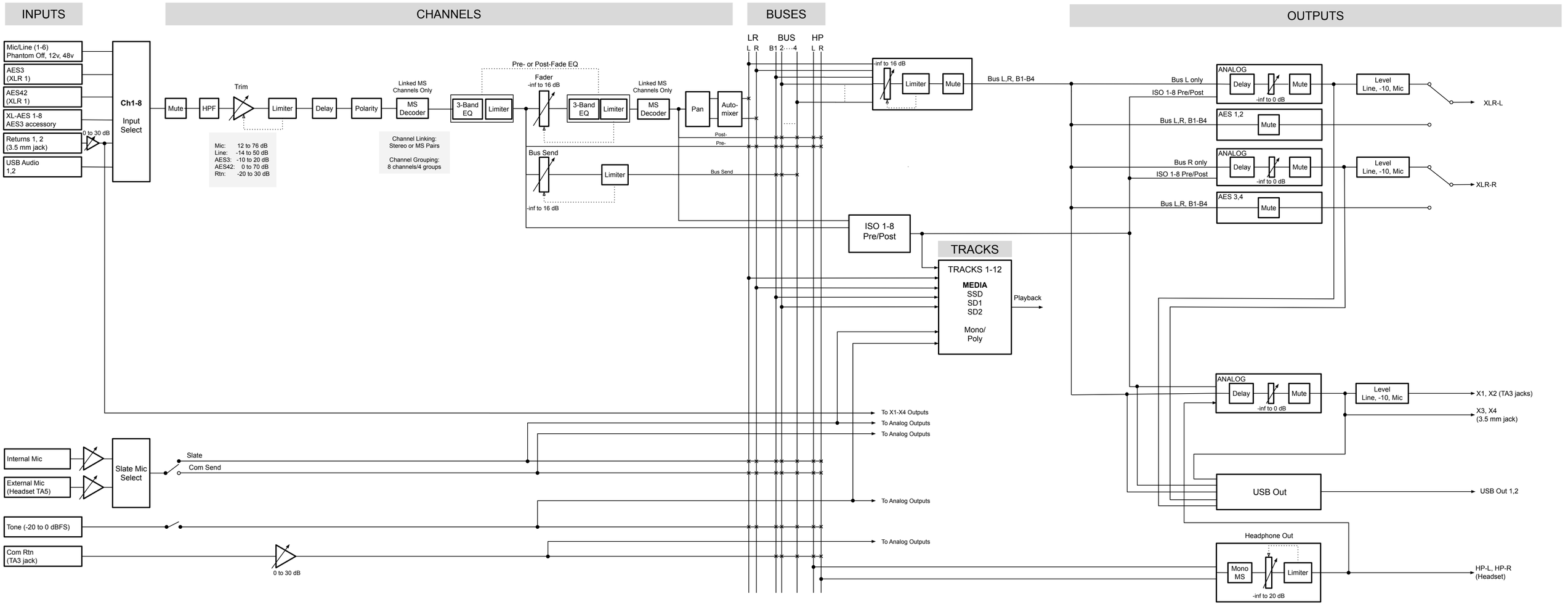

833 AUDIO SIGNAL BLOCK DIAGRAM