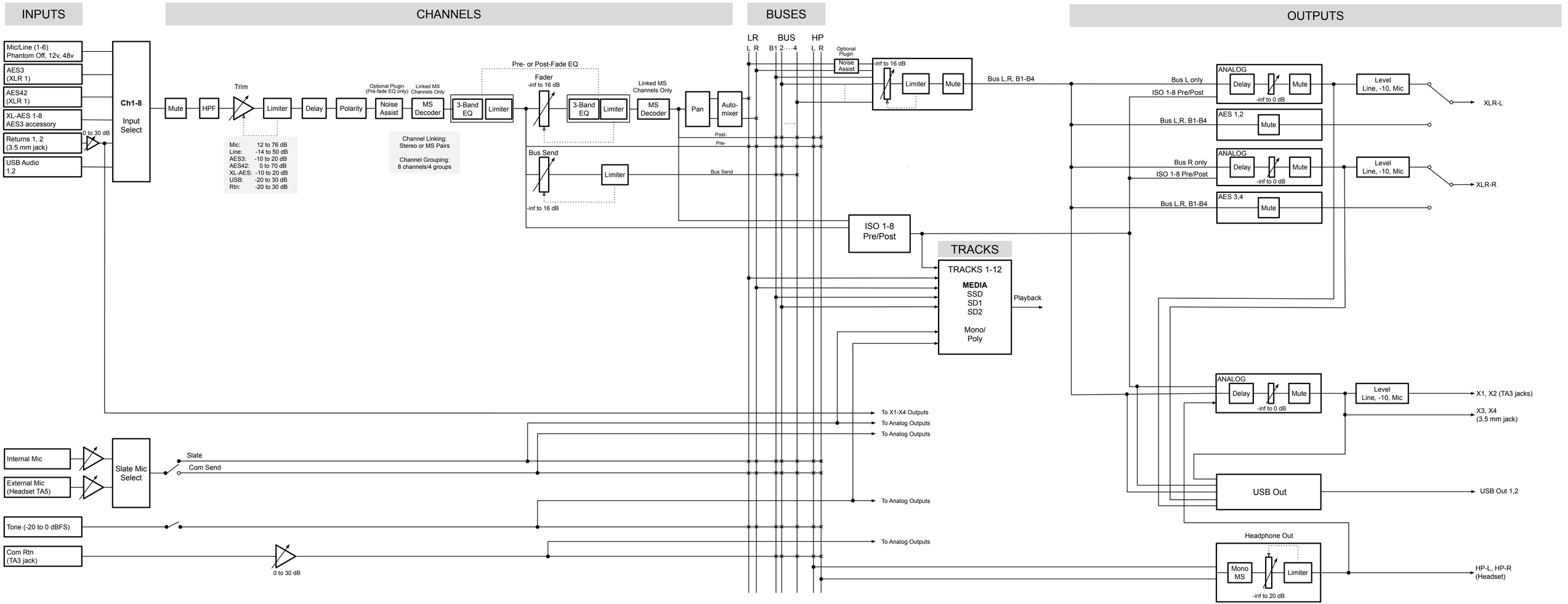

833 AUDIO SIGNAL BLOCK DIAGRAM (V5.00)

SOUND DEVICES