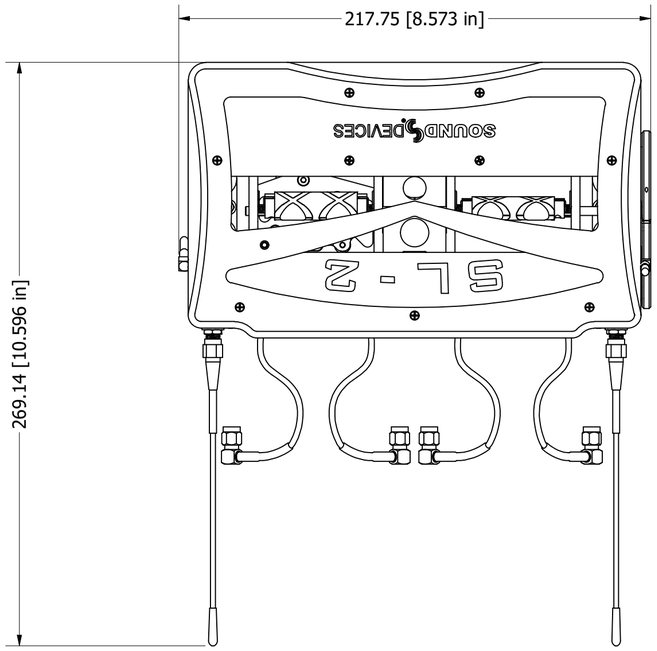

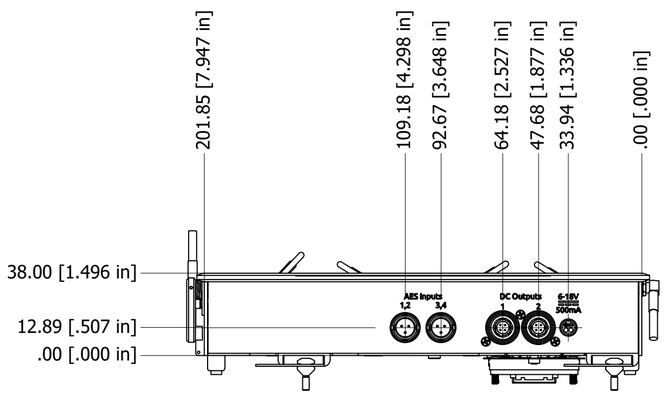

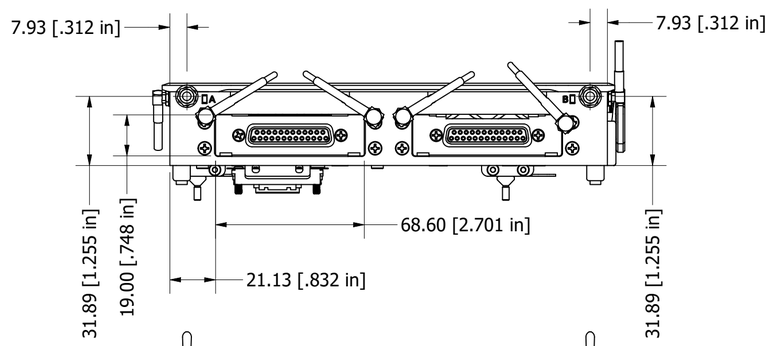

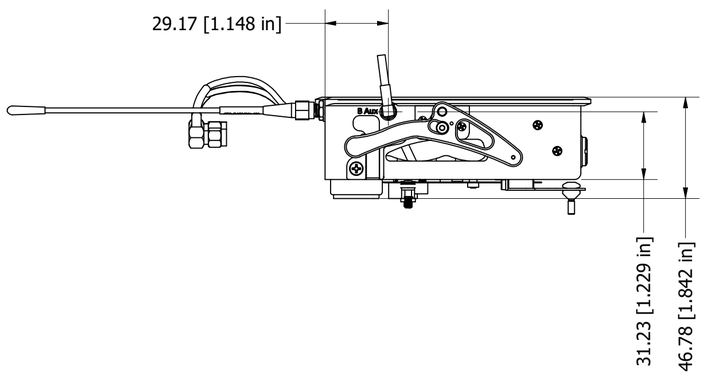

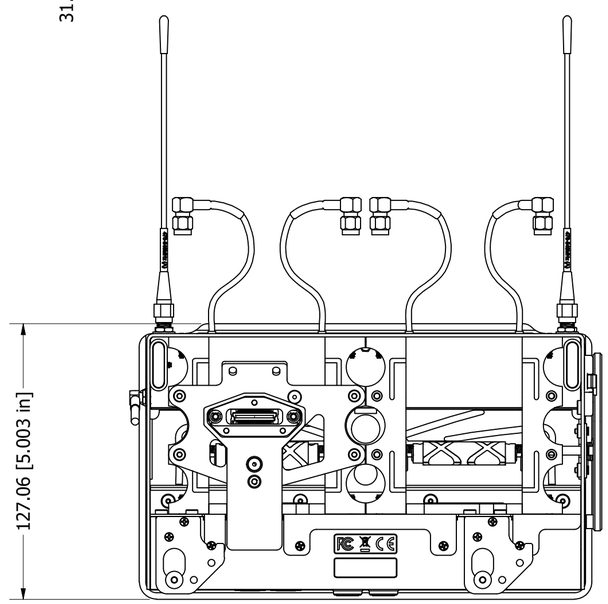

MATERIAL	CONFIDENTIAL AND PROPRIETARY TO SOUND DEVICES LLC. NOT TO BE DISCLOSED OR DISTRIBUTED WITHOUT CONSENT.
DATE	SOUND DEVICES
ENG Jason M.	E7556 State Road 23/33, Reedsburg, WI 53959 — PH: 608-524-0625, www.sounddevices.com
Dimensions are in millimeters unless otherwise specified.	TITLE: SL-2 Public View
Tolerance unless otherwise specified: .XXX +/- .125, .XX +/- .25, .X +/- .75, Angles +/- .5°	SIZE A2 — SHEET 1 OF 1 — DWG # -